Parts Catalog



G12A

Slicing Machine

Model: G12A

07/31/2026 Rev H, Starting Serial Number 602638 and Up

IMPORTANT!

TO EXPEDITE SHIPMENT OF PARTS, ALWAYS SPECIFY MODEL, REV, PART NUMBER, AND SERIAL NUMBER OF UNIT.

GLOBE FOOD EQUIPMENT COMPANY

2215 East River Road
Dayton, Ohio 45439

Parts Department
Toll Free 1-800-745-6238
E-Mail: info@globefoodequip.com
Website: www.globefoodequip.com

Not for resale

© Globe Food Equipment Company, 2026

Table of Contents

Description	Page
G12A Base Components	4
G12A Chute Components	6
G12A Knife and Sharpener Components	8
G12A Auto Drive Components	10
G12A Electrical Components	12
G12A Wiring Diagram - 115, 50_60 Hz, 1PH	14

G12A Base Components

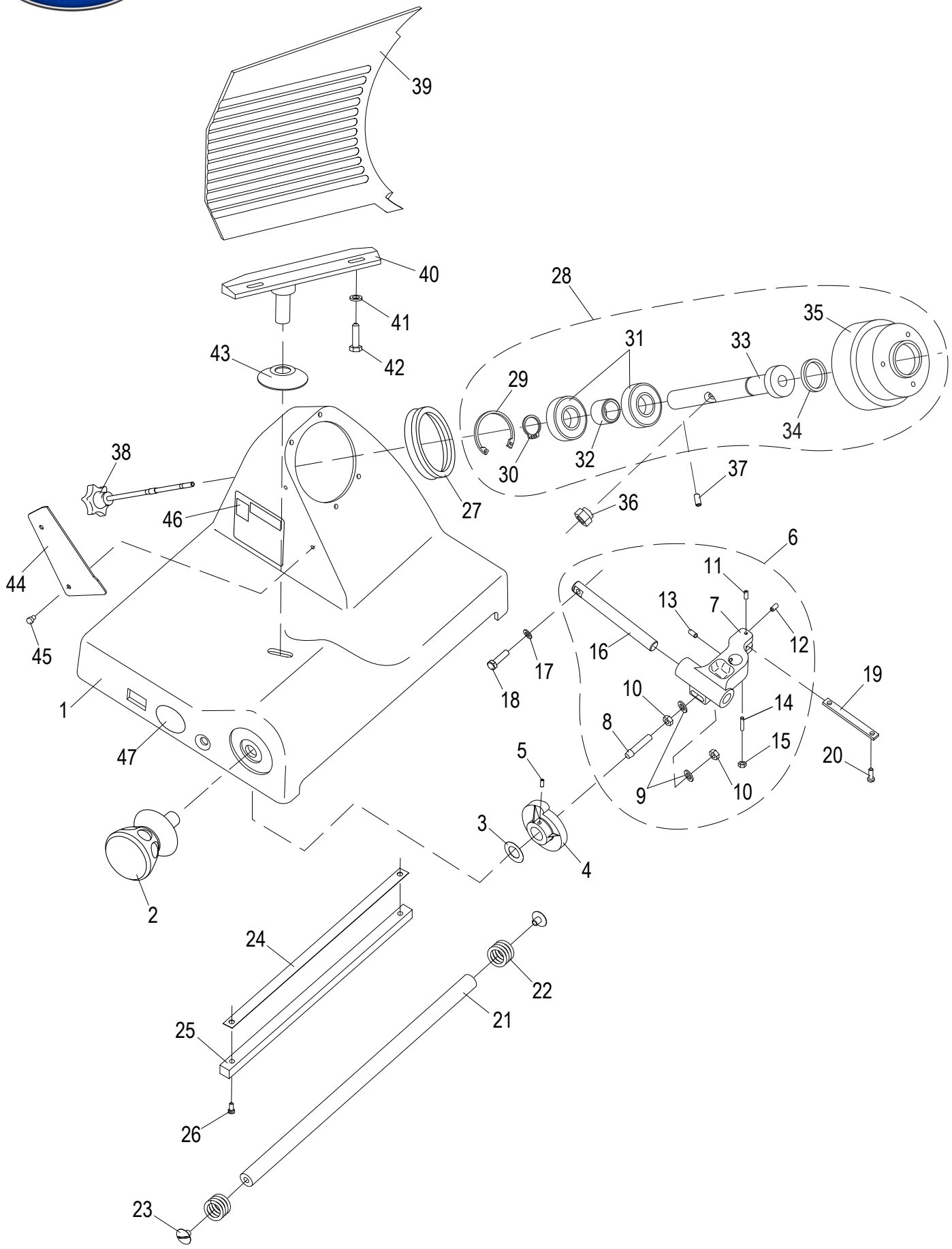

© Globe Food Equipment Company

G12A Base Components

Item	Part Number	Description	Qty	Serial Number
1		Slicer Base	1	
2	M00209	Table Adjustment Knob	1	
3	M003	Wave Washer	1	
4	M004	Cam	1	
5	H00181	Set Screw	2	
6	M305	Table Slide Assembly (Incl. items 7-16)	1	
7		Table Slide	1	
8	M03026	Threaded Rod	1	
9	X08101	Flat Washer, Zinc M8, OD-16mm,TH-1.5mm	2	
10	H00192	Hex Nut M8-1.25,13mm Width,4 mm Height-Zn	2	
11	H00182	Set Screw M5x10 Flat Pt Slotted - Zn	1	
12	H00185	Set Screw	1	
13	H00186	Set Screw M8-1.25x10 Cup Pt. Hex Socket - BO	2	
14	H00188	Set Screw	1	
15	X30186	Hex Nut, Zinc M5-0.8 OD-8, TH-4mm	1	
16	MR36	Table Slide Rod	1	
17	X08101	Flat Washer, Zinc M8, OD-16mm,TH-1.5mm	2	
18	H00116	Hex Head Screw M6-1.0x20 - Zn	2	
19	M016	Table Slide Plate	1	
20	H00061	Hex Head Screw M5x10, Zinc	2	
21	M059	Round Slide Rod	1	
22	M061	Spring	2	
23	M060	Screw	2	
24	M063	Wear Strip	1	
25	M062	Square Slide Bar	1	
26	H00056	Screw	2	
27	MGI77/5	Knife Seal	1	
28	M319	Knife Hub Assembly (Incl. items 29-35)	1	
29	H00193	Retaining Ring, Internal	1	
30	H00195	Retaining Ring, External	1	
31	M020	Bearing (6204 6RS)	2	
32		Spacer, Knife Pulley	1	
33		Shaft, Knife Hub	1	
34	MR12/7	Oil Seal	1	
35		Pulley, Knife Hub	1	
36	MCR61	Knife Hub Nut	1	
37	H00184	Set Screw	1	
38	M00225	Knife Cover Release Knob	1	
39	M00232	Table	1	
40	M00227	Table Support	1	
41	X08101	Flat Washer, Zinc M8, OD-16mm,TH-1.5mm	2	
42	H00196	Screw	2	
43	M073	Hole Cover	1	
44	M097	Slice Deflector	1	
45	MCC23	Thumb Screw	2	
46	M91022	Warning Label	1	
47	M91021	Globe Logo	1	

© Globe Food Equipment Company

G12A Chute Components

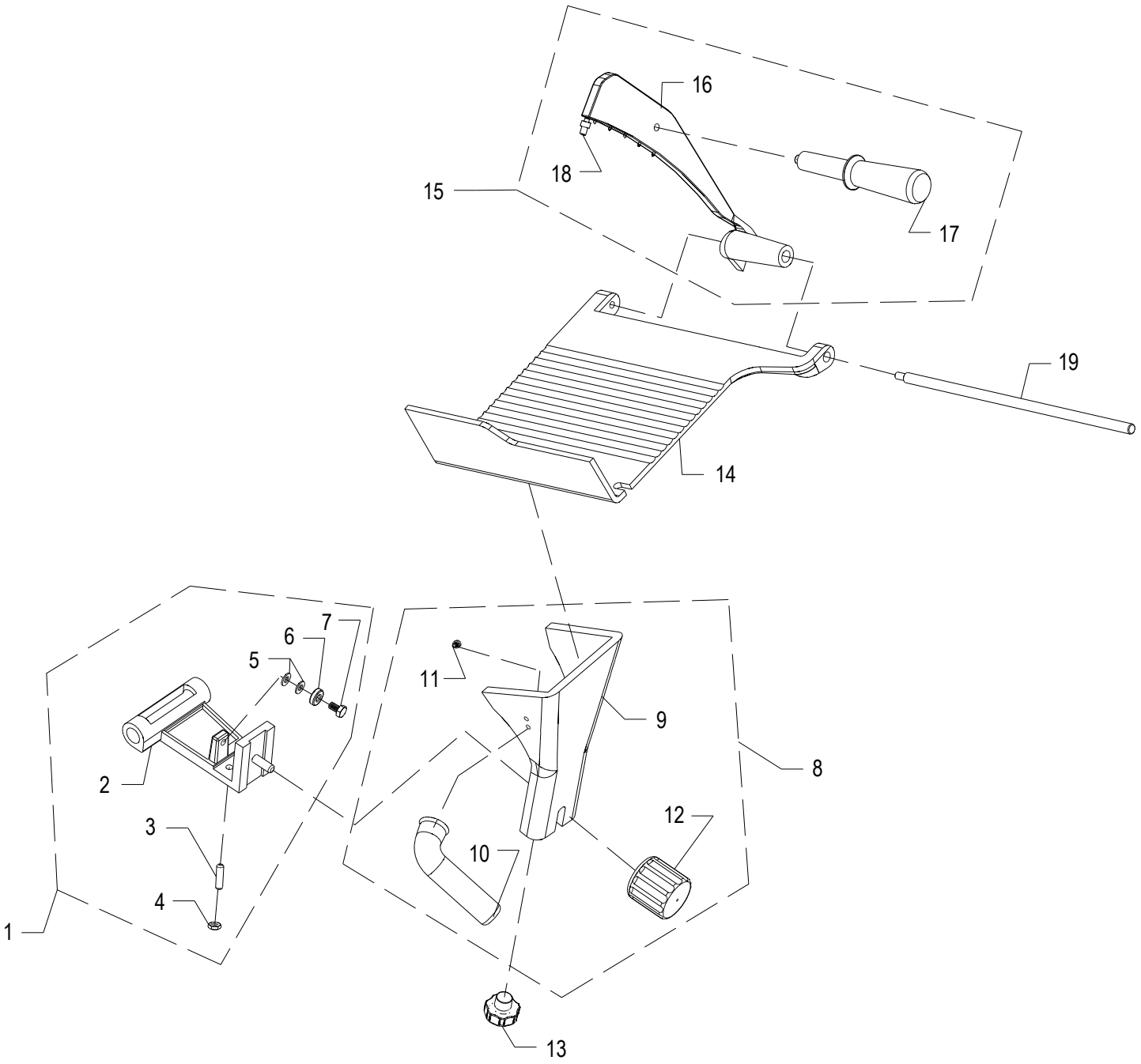

© Globe Food Equipment Company

G12A Chute Components

Item	Part Number	Description	Qty	Serial Number
1	M00291	Chute Slide Assembly (Incl. items 2-7)	1	
2		Chute Slide	1	
3	M053	Brass Stud	1	
4	H00192	Hex Nut M8-1.25,13mm Width,4 mm Height-Zn	1	
5	X08101	Flat Washer, Zinc M8, OD-16mm,TH-1.5mm	2	
6	M056	Bearing (608 2RS)	1	
7	H00117	Hex Head Screw M8x20 - Zn	1	
8	M00282	Chute Support Assembly (Incl. items 9-11)	1	
9		Chute Support	1	
10	M067	Chute Support Handle	1	
11	H00156	Ext. Hex Hd M6x1.0x12 mm Screw Zinc 8.8	2	
12	M00268	Chute Support Knob	1	
13	M00254	Chute Release Knob	1	
14	M01068	Chute	1	601330 - 602637
14	M02732	Chute	1	602638 ->
15	M01069	End Weight Assembly (Incl. items 16-18)	1	601330 - 602637
15	M02737	End Weight Assembly (Incl. items 16-18)	1	602638 ->
16		End Weight	1	
17	M00261	End Weight Handle	1	
18	M01070	Bumper	1	601330 - 602637
18	M02733	Bumper	1	602638 ->
19	M01071	End Weight Rod	1	
20	M500A	Chute Fence Assembly (Not Shown)	1	
21	M00289	Fence Release Knob (Not Shown)	1	
22	741-5B	Bumper (Not Shown)	1	

© Globe Food Equipment Company

G12A Knife and Sharpener Components

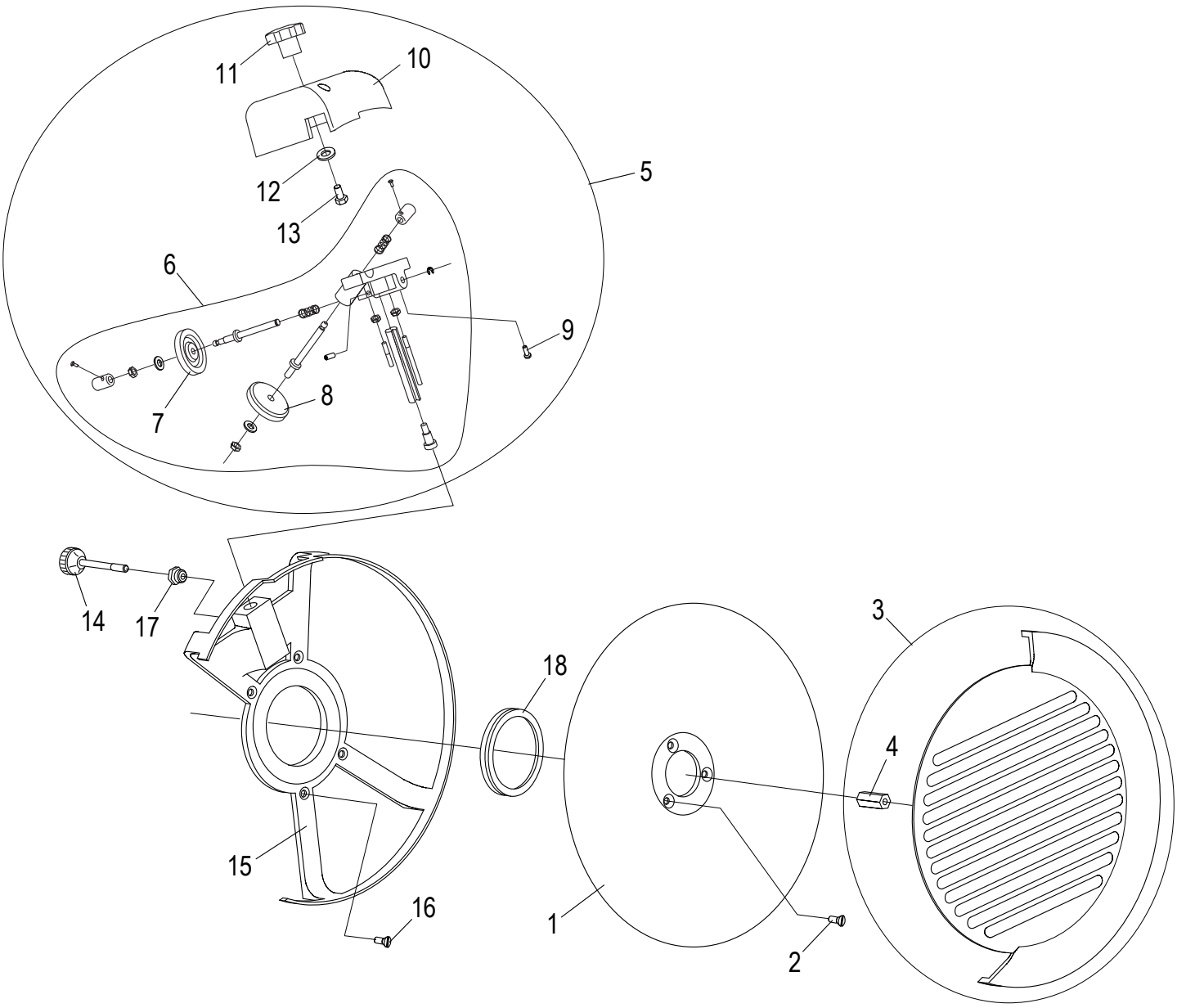

© Globe Food Equipment Company

G12A Knife and Sharpener Components

Item	Part Number	Description	Qty	Serial Number
1	M047	Knife	1	
2	H00201	Screw	3	
3	M349	Knife Cover Kit (Incl. items 3-4)	1	->604625
4	M049A	Insert	1	->604625
3	M03207	Knife Cover Kit (Incl. items 3-4)	1	604626 ->
4	M03206	Insert	1	604626 ->
5	M377	Complete Sharpener Assembly (Incl. items 6-13)	1	
6	MC017	Sharpener Assembly (Incl. items 7-9)	1	
7	M092	Deburring Stone	1	
8	MCC17	Sharpening Stone	1	
9	H00187	Cheese Hd Screw M5-0.8x16 Slotted - Zn	2	
10	M074	Sharpener Cover	1	
11	M075	Sharpener Cover Knob	1	
12	M035	Flat Washer ID 6.5 OD 12 TH 1.5 mm Zinc	1	
13	H00197	Hex Hd Screw M6x15 - Zn	1	
14	M096	Sharpener Release Knob	1	
15	M044	Rim Guard	1	
16	H00435	Screw	4	
17	M045	Insert	1	
18	MGI77/5	Knife Seal	1	

© Globe Food Equipment Company

G12A Auto Drive Components

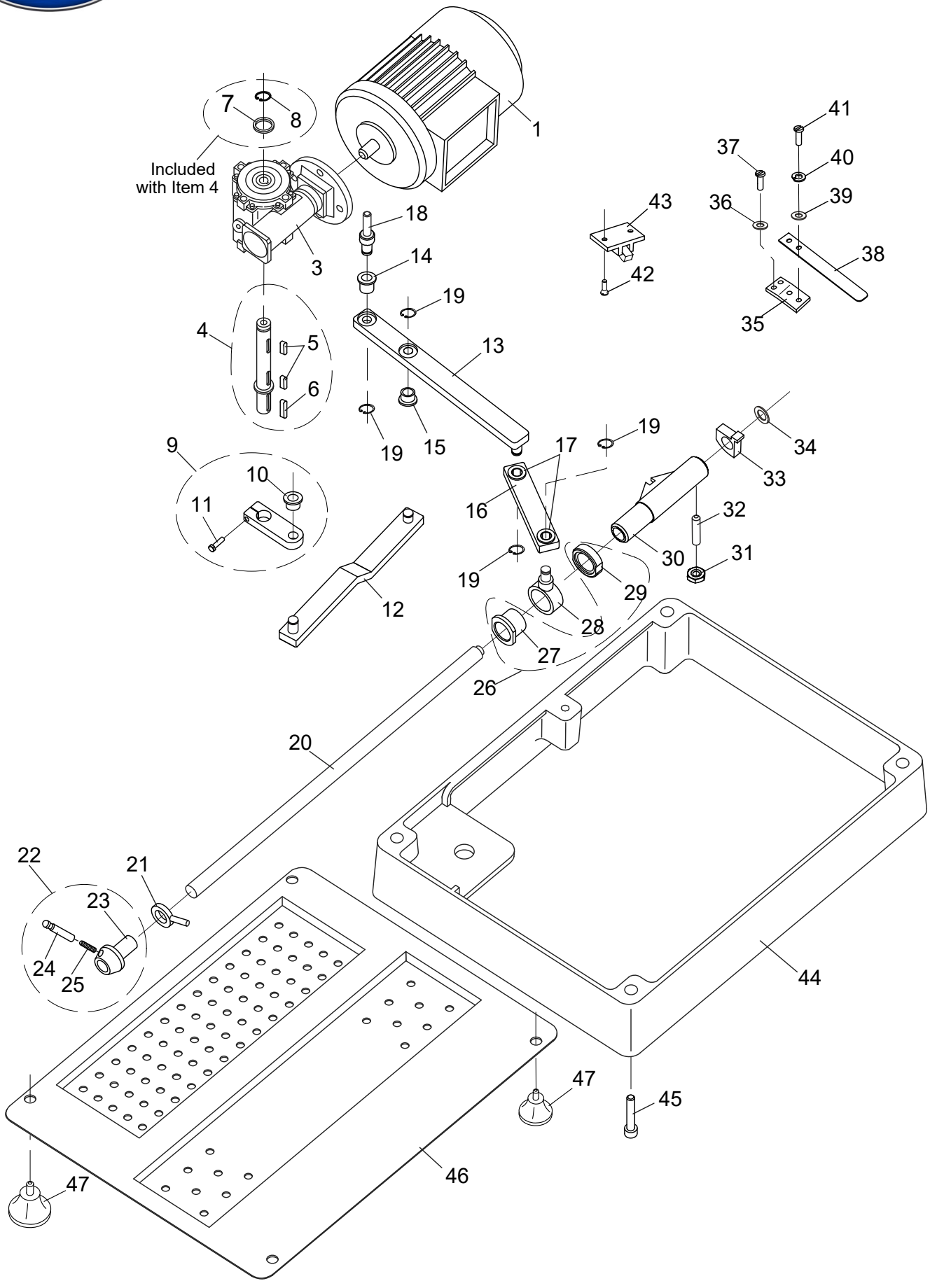

© Globe Food Equipment Company

G12A Auto Drive Components

Item	Part Number	Description	Qty	Serial Number
1	M120	Chute Motor (115V/60HZ/2.5A)	1	
2	M120-K	Key	1	
3	M121	Reducing Gear	1	
4	M129	Auto Drive Shaft (Incl. items 5-8)	1	
5	X25143	Round End Key H-5mm, W-5mm, L-14mm	2	
6	X40073	Round End Key, H-5mm, W-5mm, L-20mm	1	
7		Spacer	1	
8	H00317	Retaining Ring, External	1	
9	M130	Auto Drive Coupling (Incl. items 10-11)	1	
10	M137	Long Bushing	1	
11	H00043	Hex Head Screw M6 x 25 mm- Zn	1	
12	M131	Connecting Rod A	1	
13	M133	Connecting Rod C	1	
14	M137	Long Bushing	1	
15	MCRS8/2	Short Bushing	1	
16	M132	Connecting Rod B	1	
17	M137	Long Bushing	2	
18	M144	Pivot	1	
19	H00317	Retaining Ring, External	4	
20	M127	Chute Slide Rod	1	
21	M147	Stop Ring	1	
22	M01076	Auto Engage Lever Assembly (Incl. items 23-25)	1	
23		Auto Engage Lever Hub	1	
24		Auto Engage Lever	1	
25	H01552	Set M3 x .5 x 20mm Screw	1	
26	M02618	Bushing & Nut Kit	1	
27		Bushing, Chute Slide (Nylon)	1	
28	M124	Slide Actuator Ring	1	
29		Chute Slide Nut (Nylon)	1	
30	M122	Chute Slide Tube	1	
31	M126	Set Screw	1	
32	H00192	Hex Nut M8-1.25,13mm Width,4 mm Height-Zn	1	
33	M136	Cam	1	
34	MB32	Wave Washer	1	
35	M135	Mounting Bracket	1	
36	H00063	Flat Washer, M5, Zinc	2	
37	H00187	Cheese Hd Screw M5-0.8x16 Slotted - Zn	2	
38	M134	Engagement Spring	1	
38	H00063	Flat Washer, M5, Zinc	2	
40	H00011	Split Lock Washer, DIN 7980 M5 - BO	2	
41	H00061	Hex Head Screw M5x10, Zinc	2	
42	M048	Flat Hd Screw M5x0.8x16 mm, Zinc 8.8 Slotted	2	
43	M143	Coupling	1	
44	M01921	Apron	1	
45	H00316	Screw	4	
46	M00325	Bottom Cover	1	
47	M115	Back Foot	2	
48	M00229	Front Foot	2	

© Globe Food Equipment Company

G12A Electrical Components

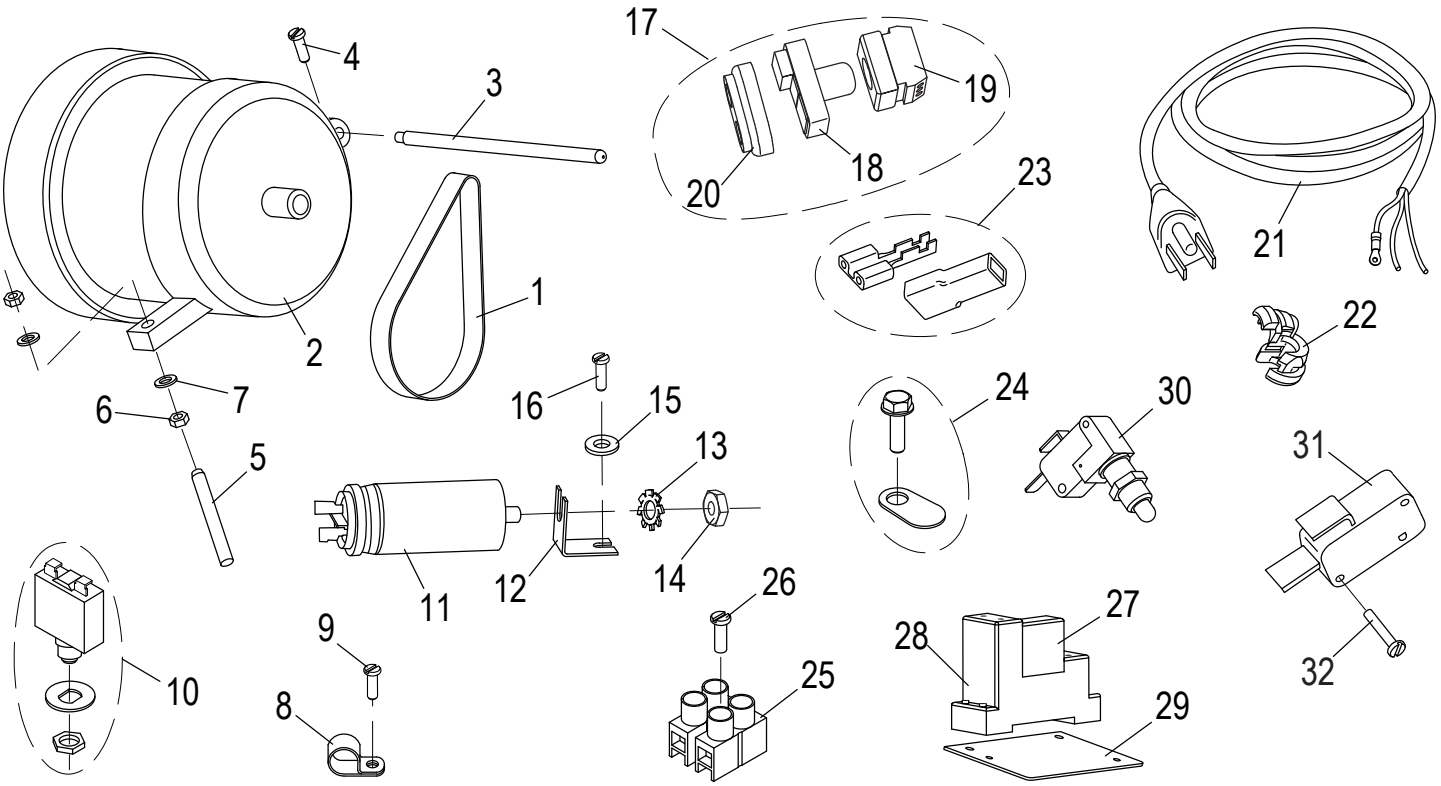

© Globe Food Equipment Company

G12A Electrical Components

Item	Part Number	Description	Qty	Serial Number
1	M024	Belt	1	
2	M030	Motor (115V/60HZ/3.5A)	1	
3	M031	Pin	1	
4	H00189	Cheese Hd Screw M4-0.7x10 Slotted - Zn	1	
5	M033	Threaded Rod	1	
6	M034	Hex Nut M6x1.0 OD 10 mm TH 5 mm Zinc	2	
7	M035	Flat Washer ID 6.5 OD 12 TH 1.5 mm Zinc	2	
8		Cable Clamp	1	
9	H00061	Hex Head Screw M5x10, Zinc	1	
10	M038	Reset Switch	1	
11	M039	Capacitor	2	
12		Capacitor Mounting Bracket	2	
13	H00335	Lock Washer M8, ID-8.4, OD-15, TH-0.8mm Zn	2	
14	H00192	Hex Nut M8-1.25,13mm Width,4 mm Height-Zn	2	
15	H00063	Flat Washer, M5, Zinc	2	
16	H00061	Hex Head Screw M5x10, Zinc	2	
17	M02050	Power Switch Assembly (Incl. items 18-20)	1	
18	M02048	On/Off Switch	1	
19		Power Switch Electrical Card	1	
20	M02047	Power Switch Cover	1	
21	M110	Power Cord	1	
22	M111	Strain Relief	1	
23	M00233	Terminal & Insulator	20	
24	M00334	Ground Screw	1	
25	MB80/2	Terminal Block w/Screw	1	
26	M029	Screw	1	
27	MCRS75	Relay	1	
28	MCRS76	Relay Mount	1	
29	M149	Mounting Plate	1	
30	M026	Microswitch	1	
31	M139	Microswitch	1	
32	H00204	Screw	2	

© Globe Food Equipment Company

G12A Wiring Diagram - 115, 50_60 Hz, 1PH

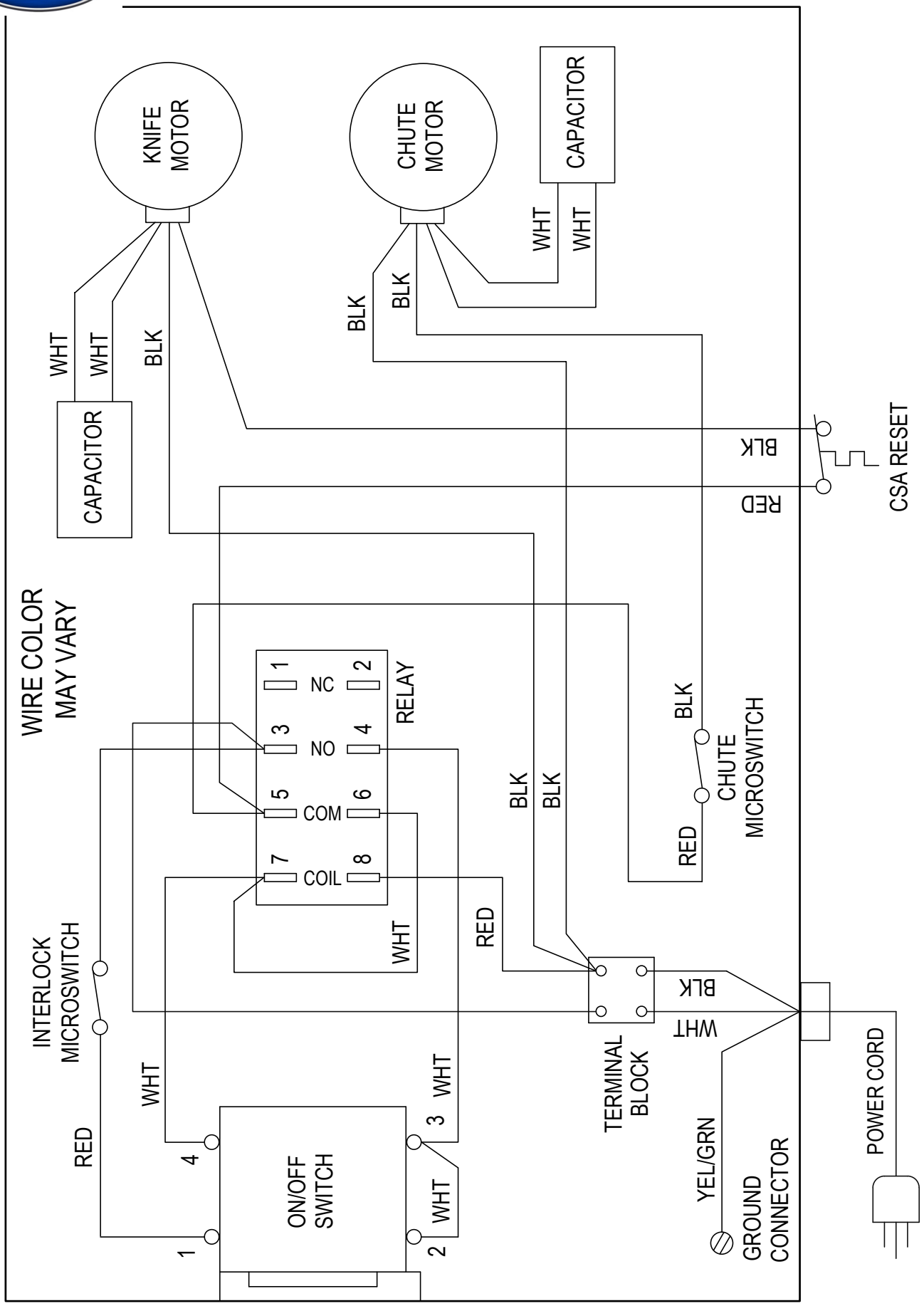

© Globe Food Equipment Company